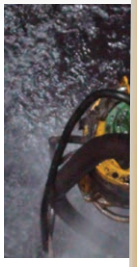

Goodwin

100 mm HNZB 30kW 50Hz

SUBMERSIBLE SLURRY PUMPS

NUMBER ONE FOR RELIABILITY, STRENGTH & ENDURANCE

TECHNICAL DATA SHEET

100 mm HNZB 30kW 50Hz

SUBMERSIBLE SLURRY PUMPS

Goodwin submersible pumps have been manufactured since 1982 and are recognised as market leaders in terms of performance and reliability. The pumps have been continually developed over 4 decades resulting in machines that can perform in the most demanding environments.

Standard Engineering Features

- Single piece cast iron motor housing to enhance rigidity and reduce wear
- 3 phase electric motor runs in oil bath to lubricate and cool the motor parts
- Cooling assisted by the pumped fluid passing through the pump body
- Twin volute casing design to reduce rotational imbalance and increase lifetime of bearings and seals
- Rotating inducer creates hydrodynamic shock waves to re-suspend settled particles beneath the pump inlet
- Carefully chosen wear resistant materials to maximise service lifetime
- Single stage, open vane impeller
- Precision bearings
- Non pressurised mechanical seal

Applications

- Open pit mine dewatering
- Mine tailings recovery and reprocessing
- Minerals processing - separation, purification, concentration
- Power plant ash removal and cleaning
- Lagoon dredging and silt removal
- River water and dam desilting
- Harbour and dry-dock cleaning
- Steel slag transport
- Rolling mill scale and metal cutting swarf transport
- Sewage and waste transfer

Pump Performance

Design fluid handled	Slurry
Maximum fluid SG	1.5 kg/l
Maximum fluid solids content	25 % by weight
Maximum particle size	12 mm
Maximum fluid temperature	90 °C
Recommended pH range	4-10
Weight (excluding cable)	770 kg
Outlet diameter	100 mm
Maximum flow	160 m^3/hr
Maximum head	60 m (5.9 bar)
Impeller diameter	420 mm
Impeller tip speed	32 m/s
Peak efficiency	51 %
Maximum submergence depth*	28 m
Shut off head at maximum pump speed	60 m

* as standard, can be deeper if required

Electrical Data

Motor type	Vertical, oil filled, squirrel cage induction
Frequency	50Hz
Phase	3
Motor rating	IEC 60034-1
Protection class	IP68
Starting method	Direct on Line (DOL), Soft Start, Variable Speed Drive. Note: Star Delta not available
Power	30 kW
Speed	1450 rpm - 4 pole
Number of starts per hour	20
Voltage variation	+/- 6%
Voltage imbalance between phases	Max 2%
Insulation class	H (180°C)
Motor overload factor	1.66
Duty rating	S1
Efficiency class	IE exempt (integral with pump)
Oil type	Mineral uninhibited to IEC 60269 (04)
Standards complied with	IEEE 112-2004, IEC 60034-1-2, AS60034-1, JEC 37
Noise level at 1m when not submerged	78 dB
Motor efficency	88%

Goodwin

Electrical Data

Voltage	Rated power (kW)	RPM	Rated (full load) Current (A)	Inrush Current Direct on Line (A)	No Load Current (A)	Power Factor cos φ (full load)	Power Factor cos φ (75% load)	Power Factor cos φ (50% load)	Recommended Over Current Protection (A)
380	30	1450	58	300	14	0.91	0.82	0.81	100
415	30	1450	54	280	13	0.91	0.82	0.81	100
525	30	1450	42	220	10	0.91	0.82	0.81	100
660	30	1450	33	170	8	0.91	0.82	0.81	80
1000	30	1450	22	120	6	0.91	0.82	0.81	50

Materials

Pump body castings	SG Iron
Impeller	NiHard (Tungsten carbide coated optional)
Casing	NiHard
Wear plate	NiHard (Tungsten carbide coated optional)
Inducer	Hardened stainless steel (Tungsten carbide tiled and coated optional)
Shaft	Martensitic stainless steel
Mechanical seal	Stainless steel and silicon carbide
O-rings	Nitrile rubber
Fasteners	Stainless steel

Coating System

Surface preparation	Class 2.5
Undercoat	Two component high build epoxy coating. 125µm thickness (typical).
Top coat	Acrylic polyurethane high gloss. 50µm thickness (typical). Yellow to RAL 1003 / BS4800 08-E-51.

Other Data

Recommended cable	Heavy duty 10mm^2 3 phase + earth copper cored cable with black chlorinated polyethylene (CPE) outer sheathing and galvanised steel pliable wire armouring. To standard BS 6708. Voltage rating 1100V. Outer sheath is oil resistant to IEC 60811-2-1, flame resistant to IEC 60332-1-2. Maximum external diameter 42.3mm. Weight 3.2kg/m Note: alternative cable can be supplied in specific regions, please contact your local supplier for details	
Recommended lifting chains	Length: 0.6 m	Material: Steel SWL: 1500 kg
Hose connection	Outlet flange	100mm PN10 M16*2.0P 4 Places ø179mm PCD
Cable gland	Material	Nickel plated brass (stainless steel optional) to BS6121:Part 1:1989
Control panel	Rating	IP65
	Weight	65kg
	Description	Provides voltage, earth leakage and phase imbalance protection. Automatic operation using timers and float switch. Note: Float switch not provided. DOL starting standard, soft start or VSD optional.

100 mm HNZB 30kW 50Hz
SUBMERSIBLE SLURRY PUMPS

Weights & Dimensions

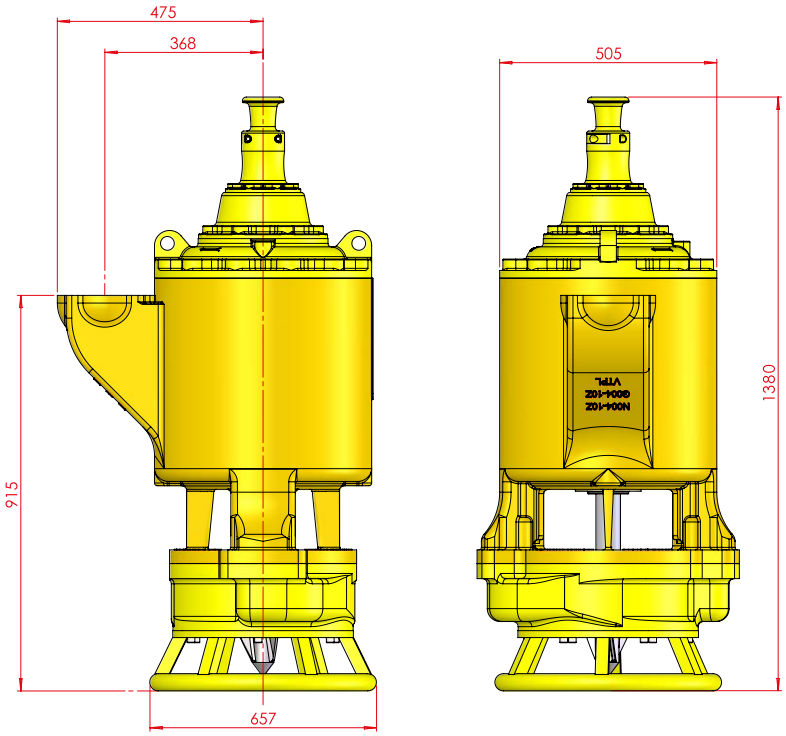

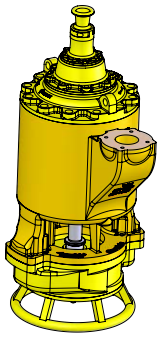

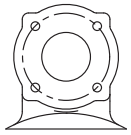

100mm Pump
4" Table 'D'
(Fits 100mm PN10)
M16*2.0P- 4 Places
ø179mm PCD

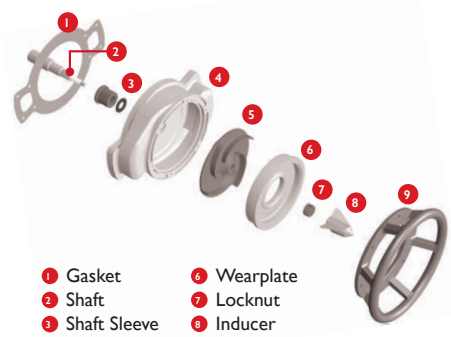

1. Gasket
2. Shaft
3. Shaft Sleeve
4. Casing
5. Impeller
6. Wearplate
7. Locknut
8. Inducer
9. Stand

Pump Curve

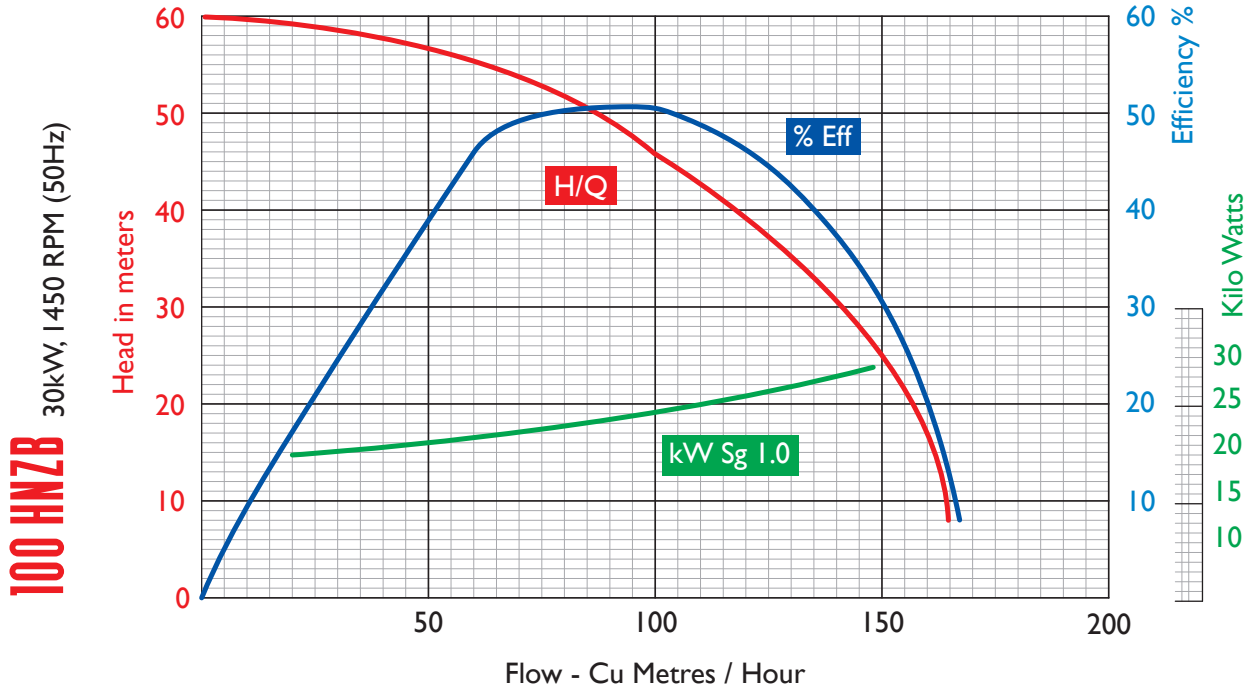

Goodwin